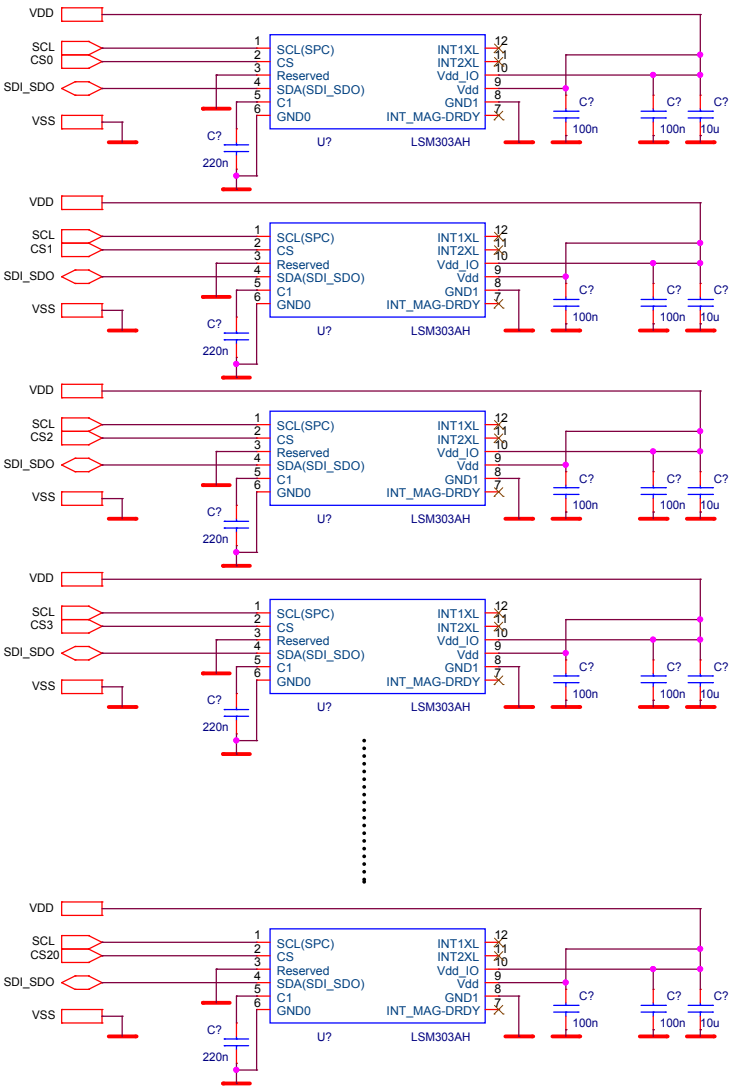
VDD
SCL
CS0
SDI_SDO
VSS
SCL(SPC)
CS
Reserved
SDA(SDI_SDO)
C1
GND0
INT1XL
INT2XL
Vdd_IO
Vdd
GND1
INT_MAG-DRDY
U?
LSM303AH
C?
220n
100n
10u
CS1
CS2
CS3
CS20