Accelerometer

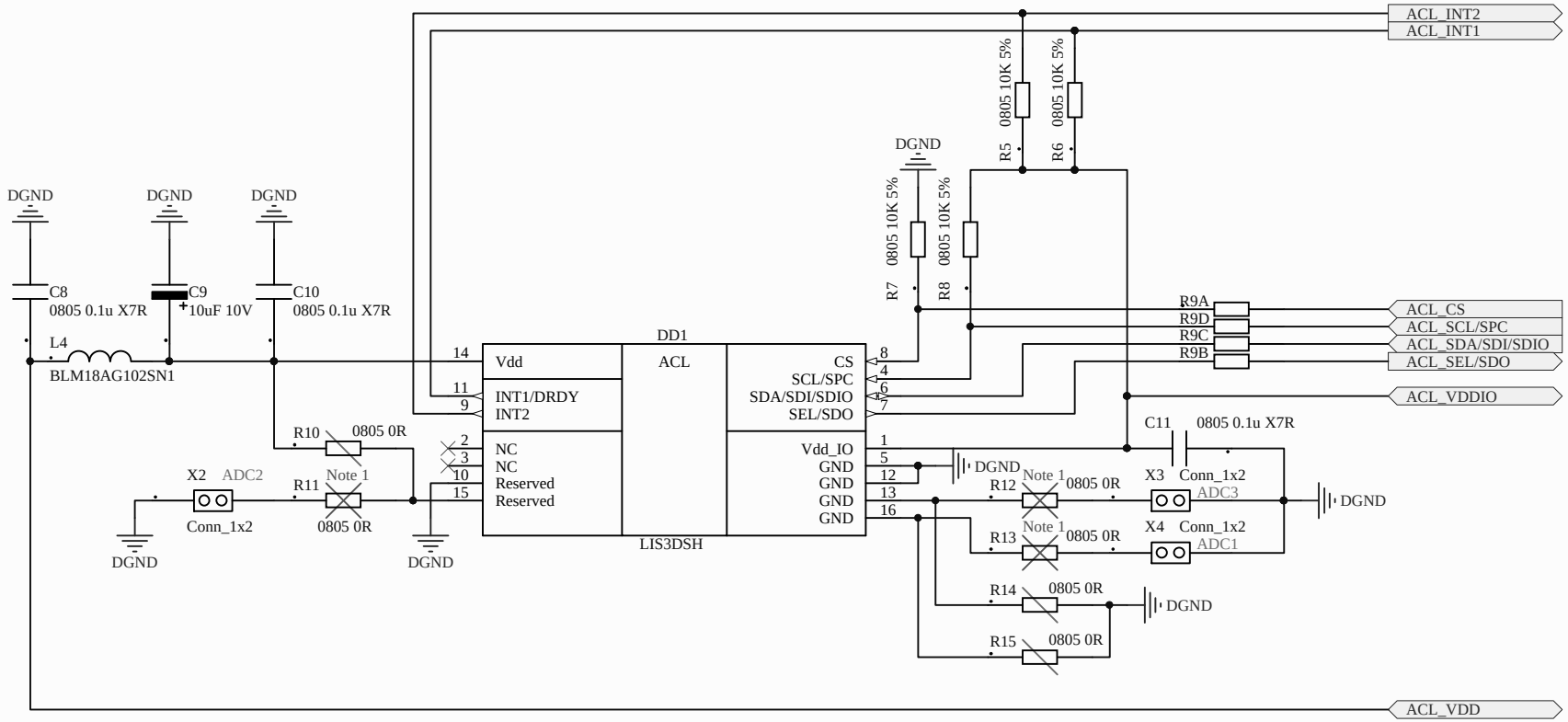

Note 1: If used LIS3DH accelerometer, then resistors may be installed (for ADCs channels) instead others.

Title		
Size A4	Number	Revision
Date: 01.04.2013		Sheet of
File: C:\Users\..\Accelerometer.SchDoc		Drawn By: